F900

User manual

* Read carefully the instructions contained in this quick start guide before starting to use the device

Presentation

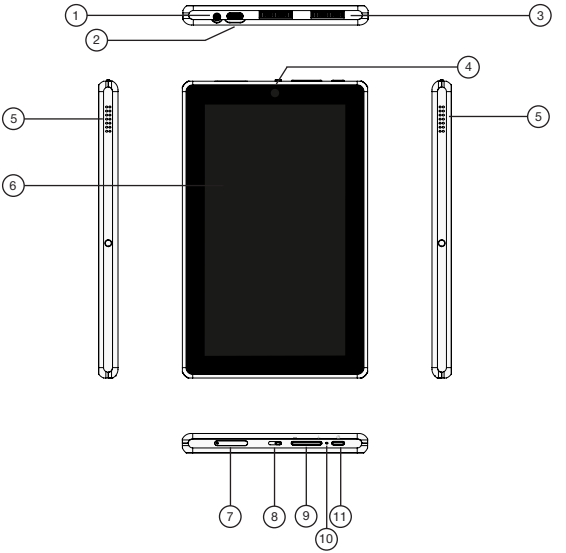

1. Headphone / Handsfree jack connector (CTIA)
2. 'Type C' USB data input port
3. 2 '10 pin' connectors for base connection
4. Camera
5. Speakers
6. Touch screen
7. Micro-SD and nano-SIM card slot
8. Camera closing tab
9. [**-** **+**] Volume key
10. **RESET** button
11. [⏻] On/Off key

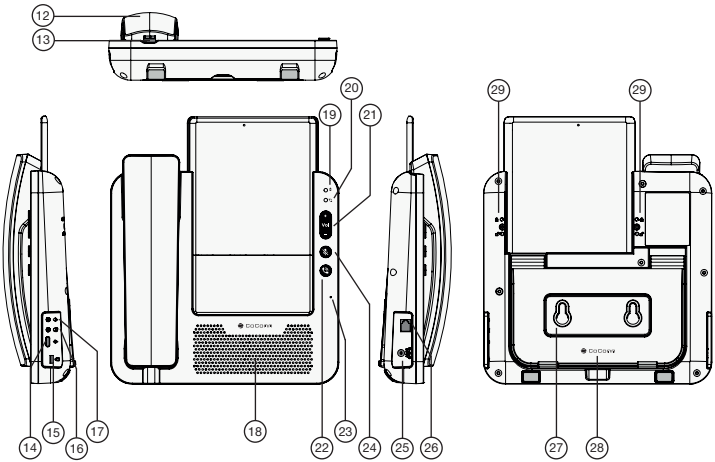

12. Handset/Receiver

13. Handset RJ9 connector

14. 'Type C' USB data input port

15. Secured cable slot

16. Headphone / Handsfree jack connector (CTIA)

17. External microphone jack connector

18. Speaker

19. Charging indicator

20. Handsfree indicator

21. [**+ Vol -**] Volume key

22. [ ] Handsfree key

23. Microphone for handsfree mode

24. [ ] Silent mode key

25. DC 5V power connector

26. Base RJ9 connector

27. Wall mounting holes

28. Multi-position stand

29. Screws for Tablet locking / unlocking

Installation

1. Above screen you will find on the left side the micro-SD and nano-SIM cards slot. Use the card removal tool and insert it into the hole. The tray will be ejected slightly.

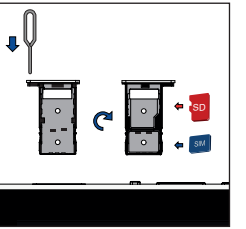

2. Once the tray is fully pulled out, turn it over to put the cards in their place as shown in the image. Turn the tray over again and return it with the cards to their place, making sure that it is fully inserted.

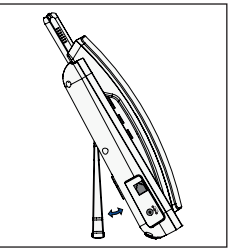

3. The base is on the back of device, use the cleft at the bottom and move it to the most comfortable position for each situation.

4. Connect the curled handset cord into the device base. Longest end cable to be connected to base while the other part to be linked to the handset. Connect power supply cable to the connector on the side of the device and then plug power supply into a household AC power outlet.

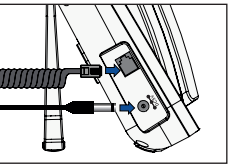

5. If you want to remove the Tablet from its position, you have to unlock the two screws on the back that are indicated in the image. Insert the hex key and turn both screws counterclockwise six turns. Then pull of the Tablet across the top side until it is removed. If you want to place the Tablet on the base, place it in position properly, and then use the hex key to turn each screw six turns clockwise.

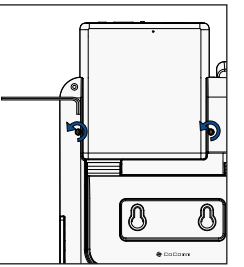

This device complies with current regulations to limit the maximum output volume. Using headphones at very high volume may cause hearing damage.

Care and maintenance

- Listening to a music player at a very high volume can damage the user's hearing and cause hearing problems (temporary or permanent deafness, ringing in the ears, tinnitus, hyperacusis). Therefore, it is strongly recommended that you do not use the player at full volume or for more than one hour a day at medium volume.
- Keep the device away from children and pets. They could damage the device accidentally or choke on small parts. Do not drop or knock the device. Rough handling can damage electronic circuits.
- Keep the device dry and avoid liquids that could corrode the device. Do not use the device with wet hands, which may cause electric shock.
- Do not place the device in areas of excessive heat, which may shorten the life of electronic devices, damage batteries, or melt accessories.
- Do not place the device in cold areas. When the device warms up to its normal operating temperature, moisture can accumulate inside the device, which may damage electronic circuits.
- Do not place the device in areas exposed to sunlight as it may cause overheating.
- Do not place the device near flammable liquids, gases or explosive substances.
- To clean the device, use a damp or antistatic cloth. Do not use a dry or static cloth. Do not use chemicals such as cleaning solvents to clean the surface of the device. Turn off your device before cleaning.
- Do not apply paint over the device, as it can prevent proper operation.
- The manufacturer's warranty does not cover repair the appliance if the device or battery gets wet, or device label is damaged even when the device warranty has not expired.
- Always make sure your device is turned off before removing your SIM card. This will prevent data loss and damage to the SIM card. Do not place the SIM card near surfaces or electromagnetic environments and avoid touching the metal connectors.

Precautions for use

Measures that affect the safety of users

- Do not use the device in certain situations (while driving) and certain places (airplanes, hospitals, schools, gas stations and professional workshops).
- For mobile phones, remember the prohibition of using the device manually by the driver of a moving vehicle.
- Users of electronic implants (pacemakers, insulin pumps, neurostimulators, etc.) must take the following precautions: the distance between the device and the implant must be at least 15 cm; the position of the device, during the call, must be on the opposite side of the implant.

Instructions for use to reduce the level of consumer exposure to radiation (this advice is given as a simple precautionary measure, no danger associated with the use of a mobile phone has been observed)

- The use of the device in good reception conditions is recommended to reduce the amount of radiation received (especially in an underground car park, when traveling by train or car ...).
- Make reasonable use of radio equipment, such as mobile phones, by children and adolescents, for example, avoiding night-time communications and limiting the frequency and duration of calls.
- Indication of good reception parameters (for example: display on the device screen of four or five bars).
- It is recommended to use a hands-free kit and, in this situation, take the following precautions during a call: keep the device away from the stomach in pregnant women or the lower abdomen in adolescents.

Battery use

- The device battery is not removable. Do not try to remove the battery from the device as it may damage the device.
- Never use any charger if damaged. Do not short-circuit the device, as this may damage the battery or cause a fire.
- Do not subject the device to high temperatures or fire as it may explode.
- The charging time depends on the remaining battery charge and charger used. Use only original chargers and accessories approved by the manufacturer.
- The battery can be charged and discharged hundreds of times, but its duration will gradually decrease. When the operation time is noticeably shorter than normal, contact the manufacturer.
- Disconnect the charger from the electrical plug and the device when the it is not in use. Do not overload your battery as it may damage or shorten its life.
- Do not expose the device to places of extremely hot or cold temperatures, as it will reduce the battery capacity. The Li-ion batteries are particularly affected by temperatures below 0° C.

When the battery level is low, the device will issue a warning tone and a low battery message. Connect the power adapter into the device to start charging. Battery level is indicated on the screen during the charging process, and once it is fully charged, the battery icon will appear full. Charging a completely discharged battery can comprise 2 to 3 hours. Fully charge the battery before using the device for the first time.

Main screen

Press the [⏻] button on the top of Tablet for 3 seconds to turn on your terminal. If this is the first time you start the device, setup wizard will be displayed. Enter the PIN code of your SIM card and press **OK** to confirm. Then wizard will guide you through device setup process.

- **Select languages:** press to display available language list, select desired language for on-screen menus, and then press **Next** to continue.
- **Date & time:** choose **Automatic date & time** to use automatic date and time provided by the network, or manually set your device date & time.
- **Connecting to Wi-Fi networks:** select **Mobile network or Wi-Fi** to connect to Internet through your SIM card or also through Wi-Fi. Click on one available Wi-Fi networks and follow the steps to enter the password and save chosen network.
- **Google Account set up:** enter your Google account information or create a new one to access all device functions.

Once you turn on the device and complete setup process, main menu will be displayed:

1. Operator
2. Time
3. Apps notifications
4. System information
5. Speed dial Widget
6. Date and time
7. Google search bar
8. Manage apps open in the background key
9. Return to main screen key
10. Back key

From the main screen, drag up the bottom navigation bar up to access the applications menu.

Press on an application icon to access it, and use the ◄ icon of the navigation bar to return to the previous menu.

You can also use the ■ icon of the navigation bar to access all the applications that are working in the background and decide whether to access it again or to close it permanently. When using an application and if you would like to return to Main screen, press the ● icon of navigation bar. The application will be closed but it will continue working in the background. A long press on this icon will take you directly to the Google search engine.

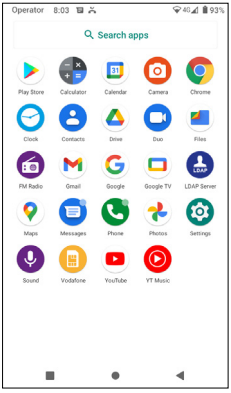

You have available all essential Google application as Google, Maps, Gmail, etc. In addition to other application for daily use as Clock, FM radio, etc. If you need an application that there isn't available, press on the Google Play icon to access Google Play.

Google Play

Google Play is your entertainment unbound. It brings together all of the entertainment you love and helps you explore it in new ways, anytime, anywhere. We've brought the magic of Google to movies, TV, books, apps and games, so you get more from your content every day.

Notifications and system menu

In the upper left corner of the screen are displayed notifications from different applications installed on your device, such as messages, email, missed calls, etc., while on the right is shown current status of the system elements as battery level, network connections, Wi-Fi, Bluetooth, etc.

Pull down notification area by sliding down top of the screen bar to access system menu.

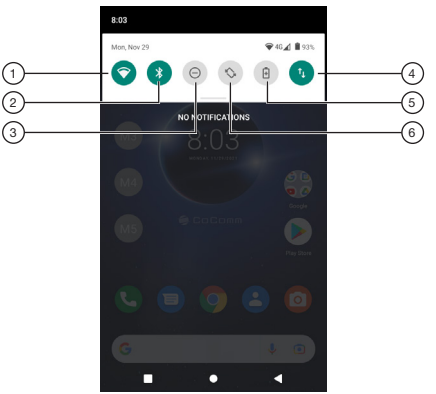

1. Wi-Fi network adapter
2. Bluetooth function adapter
3. No disturb function
4. Data connection
5. Battery saving
6. Screen rotation function

You can expand more menu system function sliding this bar down.

Press on the proper icon to enable or disable Wi-Fi or Bluetooth connections, change audio profile, screen brightness, backlight time, etc.

By holding, the icon will access configuration of the corresponding function in system settings menu.

To turn off the device press [⏻] button on the top of Tablet for 3 seconds, and select the option **Power off**. Use a short press on this same button to lock and unlock the screen.

Calling using the alphanumeric keypad

1. In standby mode, pick up the handset, enter phone number using alphanumeric keypad displayed on screen and press icon to call.
2. To end the call, press the icon or hang up the handset.

Calling in handsfree mode

1. In main screen press icon to access telephone application.
2. Enter phone number using the alphanumeric keypad and press icon to call.
3. Press [ ] button to start handsfree mode. The indicator will glow green, indicating that handsfree mode is active.

Answer or silence an incoming call

1. During an incoming call, drag left icon to answer the call or pick up the handset.
2. Before the call is answered, you can mute incoming call ringtone by pressing the [ ] button.
3. When the call is active, press the [ ] button to mute your microphone.

Transfer an incoming call

1. During an incoming call, pick up the handset or drag left icon to answer the call or pick up the handset.
2. Press on the icon on the screen to start a second call to another phone number or contact from the phonebook.
3. When the second call is active, press icon to transfer the incoming call to the second contact

Adjusting handset volume

During an active call, press the [+ **Vol** -] buttons to decrease or increase respectively your headset of handsfree volume.

Calling

Three way calling

1. During an incoming call, pick up the handset or drag left icon to answer the call.
2. Press on the icon to hold active call and start a second call to another phone number or contact from the phonebook.
3. When a second call is active, press on the icon to start multi conference.
4. Repeat operation to add up to 5 participants.

Configuring speed dial keys

1. In main screen press on one of not set speed dial icons M1-M9 to access speed dial menu, or press telephone icon to access call menu, then drag down the keypad and speed dial menu will be shown.
2. Press one speed dial icon to associate e new contact. You can associate a phone number or a phonebook contact.
3. Press **Add** to confirm and complete the operation.
4. When a speed dia key is already set, press icon to edit it, or press icon to delete.
5. In main screen menu press a speed dial icon M1-M9 to use speed dial function and call associated contact. The call will start automatically.
6. To end the call, press the icon or hang up the handset.

Make a video call

1. In applications menu, press on the icon to access Duo application (Also you can download other video call application).
2. The phonebook contacts with Duo account will be displayed. Press on desired contact and then select **Video call** to start calling.

Bluetooth® connection

The Bluetooth® function allows you to pair your terminal with other Bluetooth® devices or accessories, like headphones, or to exchange contacts or media files with other devices. Also you can use the terminal to answer received calls in other paired device, as a smartphone.

To enable Bluetooth® adapter, slide down system information bar to display system menu, and press on the icon. If any previously paired device is within device range, it will automatically connect, and the icon will be displayed in the system notification bar.

Pairing to a Bluetooth device®

1. Hold down the icon in the system menu to access Bluetooth® settings, or access through system settings menu by pressing on the icon in application menu.
2. Within **Connected device** configuration menu, press **Pair new device** and all Bluetooth® devices visible within the range of the terminal will be displayed on the screen.
3. Press on the device you want to pair to your terminal and accept the pop-up menu is shown in both devices. Make sure that the temporary visibility of both devices is enabled.

Importing Contacts via Bluetooth®

1. Once the devices are paired, access **Contacts** on your Smartphone and select **Share** or **Export** (depending on the Smartphone), select **Share via Bluetooth®**, and select the contacts you want to send.
2. A message will appear to confirm the file transfer. Select **Accept** to receive the file.
3. Once sent, the telephone will receive a file in vcf (or vcard) format, you can access it drag down the notification bar and pressing on the Bluetooth® notification. Then press on the received file and select the destination (SIM card, phone, online account, etc.)

Wi-Fi connection

To enable Wi-Fi network adapter, slide down system information bar to display system menu, and press on the icon. If any Wi-Fi network previously configured is within the range of the device, it will automatically connect, and the icon will be displayed in the system notification bar.

Set up a Wi-Fi network connection

1. Hold down the icon in the system menu to access Wi-Fi settings, or access through system settings menu by pressing on the icon in application menu.
2. Within **Networks & Internet** configuration menu, you can enable or disable Wi-Fi function. Also you can access Wi-Fi settings pressing **Wi-Fi**, if Wi-Fi network adapter is active, all networks within terminal range will be displayed.
3. Press on the Wi-Fi network you want to connect, enter the password in the pop-up window, and press on **Connect** to save settings and connect to the network.
4. Within the Wi-Fi setup menu, press **Wi-Fi Preferences** to open Wi-Fi options menu.

Activate Wi-Fi hotspot

1. Press icon in the application menu. Within **Networks & Internet** select **Hotspot & tethering** option.
2. Then press **Wi-Fi Hotspot** and press on **On/Off** to enable or disable the fuction respectively
3. Within this menu you also can modify Hotspot name, Security or Hotspot password.

Regulations

Hereby, CO-COMM Servicios Telecomunicaciones S.L. declares that this product is in compliance with the essential requirements and any other applicable or enforceable provisions of Directive 2014/53/EU (RED Directive) of the European Parliament and of the Council of 16 April 2014. You can obtain a copy of the declaration of conformity with the aforementioned directive by sending an email to clientes@cocomm.es, adding the word DoC in the Subject line, and specifying the batch number of the product in the body of the message. This product can be used in all EU countries (and other countries following Directive 2014/53/EU).

Hereby, CO-COMM Servicios Telecomunicaciones S.L. declares that this product is in compliance with the essential requirements and any other applicable or enforceable provisions of The UKCA (UK Conformity Assessed) to demonstrate conformity with UK Regulations. Goods that pass their relevant conformity assessments will be affixed with the UKCA mark, which allows them to be sold in Great Britain (England, Wales and Scotland).

ErP Product Information

Hereby, CO-COMM Servicios Telecomunicaciones S.L. declares that this product is in compliance with Directive 2009/125/EC and its implementing regulation (EC) No. 1275/2008, as amended by (EC) No. 278/2009, (EC) No. 642/2009, (EU) No. 617/2013, (EU) No. 801/2013 and its implementing regulation (EC) No. 278/2009.

The power consumption of the product, when connected to the network, in standby mode, and with all wireless and physical interfaces connected, is 0.21 W.

For the information required by Regulation (EU) No. 801/2013, which appears on the manufacturers' freely accessible websites, visit https://www.cocomm.es.

SAR Certification Information

This device complies with guidelines for exposure to radio waves.

It is a low-power radio transmitter and receiver. It is designed not to exceed the limits for exposure to radio waves as recommended by international guidelines. These guidelines were established by the International Commission on Non-Ionizing Radiation Protection (ICNIRP), which is an independent scientific organization, and include safety measures designed to ensure the protection of people, regardless of their age or health.

Specific Absorption Rate (SAR) is the unit of measurement of the amount of radio absorbed when using mobile devices. SAR tests are performed in standard handling positions, with the phone transmitting at its highest certified power level,
however, the actual SAR level of the phone while operating is usually well below the maximum value. In general, the closer you are to a base station, the lower the power of the phone.

SAR values may vary, depending on different phone models. To ensure the safety and health of users, the phone is designed and manufactured to meet radio exposure guidelines. The SAR limit recommended by the Council of the European Union for mobile devices used by the general public is 2 W/kg and the highest SAR value for this device, which was tested for use at the ear, is below the recommended SAR limit.

The highest SAR value recorded during product certification is 0.765W/kg, measured on 10g of tissue, in the 2.4GHz WLAN band.

Body part	Maximum SAR value (W/kg)	SAR limit (W/kg)	Band
Body	0.765	2	2.4GHz WLAN
Extremities (0mm apart)	0.765	4	2.4GHz WLAN

Regulations

Maximum power table

Mode of operation	Bands / Frequency Range (MGZ)	Nominal conducted transmission power (dBm)
GMS	900	33.83
	1800	29.27
WCDMA	1	23.59
	8	24.72
LTE	1	25.08
	3	25.23
	7	24.43
	8	24.60
	20	24.27
	28	23.66
	38	23.35
BT		4.14
BLE		3.37
Wi-Fi 2.4G		12.04
Wi-Fi 5G	5150~5250	8.21
	5250~5350	7.96
	5470~5725	8.42

This product complies with Directives 2012/19/EU (WEEE Directive) and 2011/65/EU (RoHS2 Directive) and Regulation (EC) No 907/2006 (REACH), and bears the symbol for selective treatment of waste electrical and electronic equipment (WEEE). This means that this product must be treated according to European Directive 2002/96/EC when being recycled or dismantled in order to minimise its impact on the environment. For further information, please consult your local or regional authorities. Electronic products not included in the selective treatment process are potentially dangerous for the environment and human health, due to the presence of hazardous substances in them.

Bluetooth®

The cost of environmental management of electronic waste has been reflected in the final price of the product, as legally established in R.D. 208/2005.

The Bluetooth® word mark and logos are owned by the Bluetooth SIG, Inc.

Wi-Fi, Wi-Fi Protected Access, Wi-Fi Protected Setup, and WPA are trademarks of the Wi-Fi Alliance.

Restrictions of use

This product may be used in the following European member states subject to the following restrictions. For products that operate in the frequency band 5.250 to 5.350 GHz, wireless access systems (WAS), including radio local area networks (RLANs), shall be restricted to indoor use.

	AT	BE	BG	CH	CY	CZ	DE	DK	EE	EL	ES
	FI	FR	HR	HU	IE	IS	IT	LI	LT	LU	LV
	MT	NL	NO	PL	PT	RO	SE	SI	SK	TR	UK (NI)

Google, Android, Google Play, Youtube, and other marks are trademarks of Google LLC. All other trademarks, products, services, and company names mentioned in this document are the property of their respective owners.
Copyright © CO-COMM Servicios Telecomunicaciones S.L. All rights reserved.

CO-COMM Servicios Telecomunicaciones S.L. reserves the right to change or modify any information or specifications appearing in this manual without prior notice.

Copyright © CO-COMM
Servicios Telecomunicaciones S.L. 2024
All rights reserved